ORIGINAL 4 3 2 1

REVISIONS			
LTR	DESCRIPTION	DATE	APPROVED
A	PROD RLSE PER ECO 37328	4-9-01	[illegible]

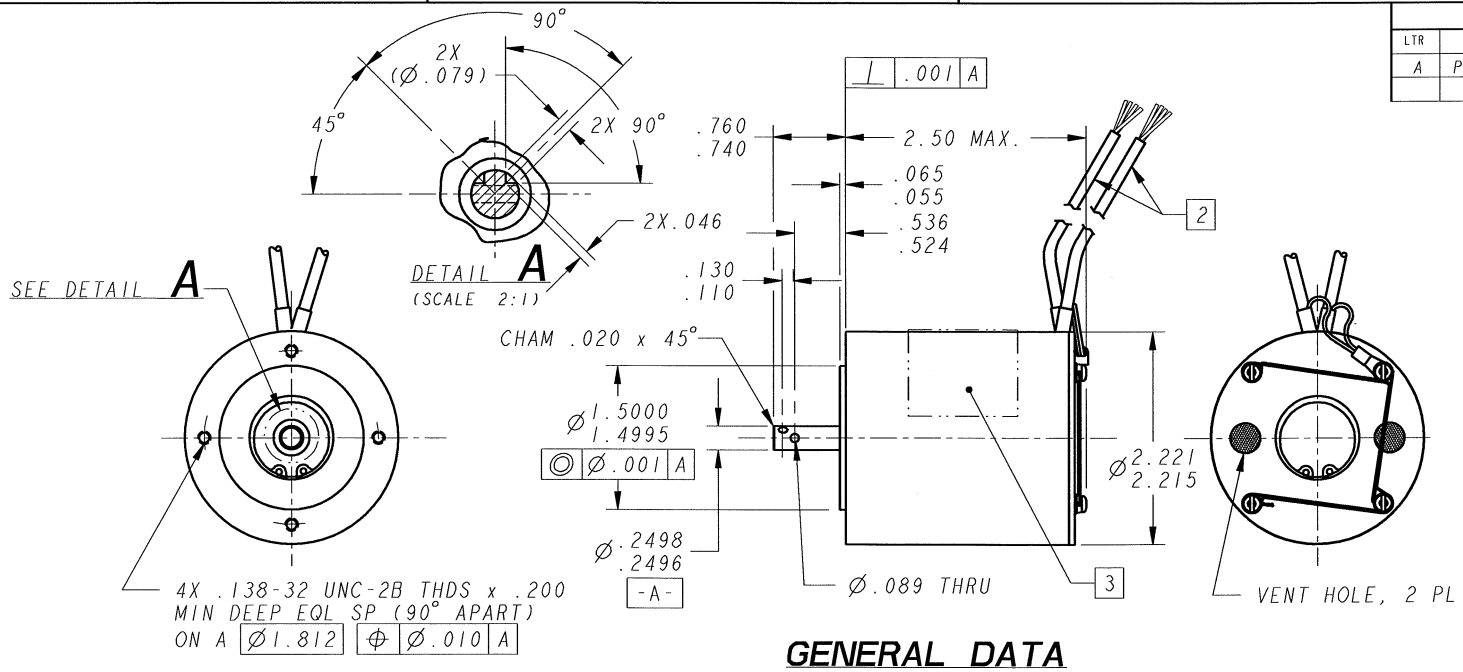

ELECTRICAL DATA

VOLTAGE (VOLTS D.C.).....28 ±2

INPUT POWER (WATTS, MAX.)
@ -55 TO +80°C.....22.4

RESISTANCE PER PHASE (OHMS)
@ 22°C.....62 ±3

SEQUENTIAL SWITCHING INFORMATION FOR CW ROTATION AS VIEWED FROM SHAFT END

STEP	RED	BLU	YEL	BLK
1	+	−	0	0
2	0	0	−	+
3	−	+	0	0
4	0	0	+	−
5	+	−	0	0

GENERAL DATA

STEP ANGLE (DEGREES).....1.8 ±21.6′

STEP RATE, REVERSIBLE (STEPS/SEC)(NOM).....8

RUNNING TORQUE @ 8 PPS (OZ-IN) .....22 MIN/25 NOM

STALL TORQUE @ -55 TO +80°C (OZ-IN).....55 NOM/85 MAX.

DETENT TORQUE @ -55 TO +80°C (OZ-IN, MIN)..2.0

ROTOR INERTIA, STEPPER MOTOR ($GM\text{-}CM^2$).....172

SHAFT RADIAL PLAY MEASURED 1/8 FROM BEARING WITH AN 16 OZ REVERSING RADIAL LOAD APPLIED 1/4 FROM BEARING (MAX.).....0.001

SHAFT ENDPLAY CHECKED WITH A 16 OZ REVERSING AXIAL LOAD (MAX.).....0.002

SHAFT RUNOUT NOT TO EXCEED (T.I.R.).....0.001

TEMPERATURE RANGE (DEGREES C) OPERATING....-55 TO +80
NON-OPERATING....-180 TO +80

WEIGHT (LBS, MAX.).....1.94 (880 GRAMS)

CIRCUIT DIAGRAM

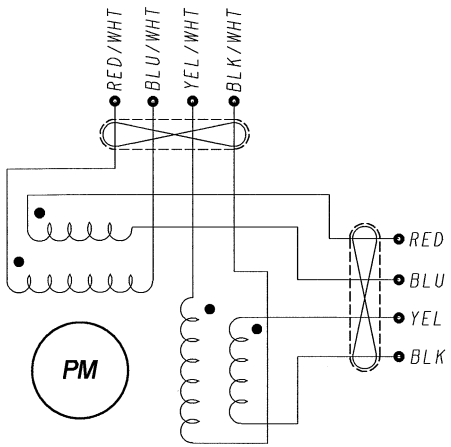

● INDICATES THE WINDING POLARITY

3 IDENTIFICATION: AEI LOGO.....ETC AND INCLUDES SER NO.....(COMMENCING WITH 0001) AND CUST PART NO..... APPLIED WITH BLACK EPOXY INK PER MIL-I-43553.

2 LEADWIRES: 4 CONDUCTOR CABLE, 24 AWG TWISTED PAIR, INSULATED, SHIELDED AND JACKETED PER MIL-C-27500 (M2750024RC4S09) 36" MINIMUM LONG FROM POINT OF EXIT.

1. ALL VALUES ARE NOMINAL AT ROOM AMBIENT. (22 ±5°C)

NOTES: UNLESS OTHERWISE SPECIFIED

FIND NO.	QTY REQD	SYM	PART NO.	DESCRIPTION	CAGE CODE	SPECIFICATION	MATERIAL OR NOTE

PARTS LIST

NEXT ASSY	USED ON	NEXT ASSY	FINAL ASSY
APPLICATION		QTY REQD	

UNLESS OTHERWISE SPECIFIED
DIMENSIONS ARE IN INCHES
INTERPRET DRAWING IN ACCORDANCE WITH MIL-STD-100
TOLERANCES
FRACTIONS ±1/64 DECIMALS XX ±.01 XXX ±.005 ANGLES ±2°
MAX. ANSI B46.1

MATERIAL:

FINISH:

CONTR NO.		
DWN	T.MARTINEZ	99/05/03
CHK	T.MARTINEZ	99/06/10
ENGR	P.LEE	99/06/10
MFG		
Q.C.		
APPD	S.ZHAO	01/03/23

AEI DUCOMMUN TECHNOLOGIES, INC.
A SUBSIDIARY OF DUCOMMUN INCORPORATED
23301 SO. WILMINGTON AVE, CARSON, CA 90745 U.S.A.

TITLE
STEPPER MOTOR
(REDUNDANT WINDING)

SIZE	CAGE CODE	DWG NO.	REV
C	08719	23TA6	A

SCALE: 1:1 SHEET 1 OF 1

23TA6 A

Pro/ENGINEER, COMPUTER GENERATED DWG, DO NOT SCALE.

SIMILAR TO REPLACES W.O.NO. 959413